DiMarzio, Inc.
1388 Richmond Terrace, PO Box 100387, Staten Island, NY 10310, Tel(718)981-9286, Fax(718)720-5296

1 HUMBUCKER, 2 VIRTUAL VINTAGE

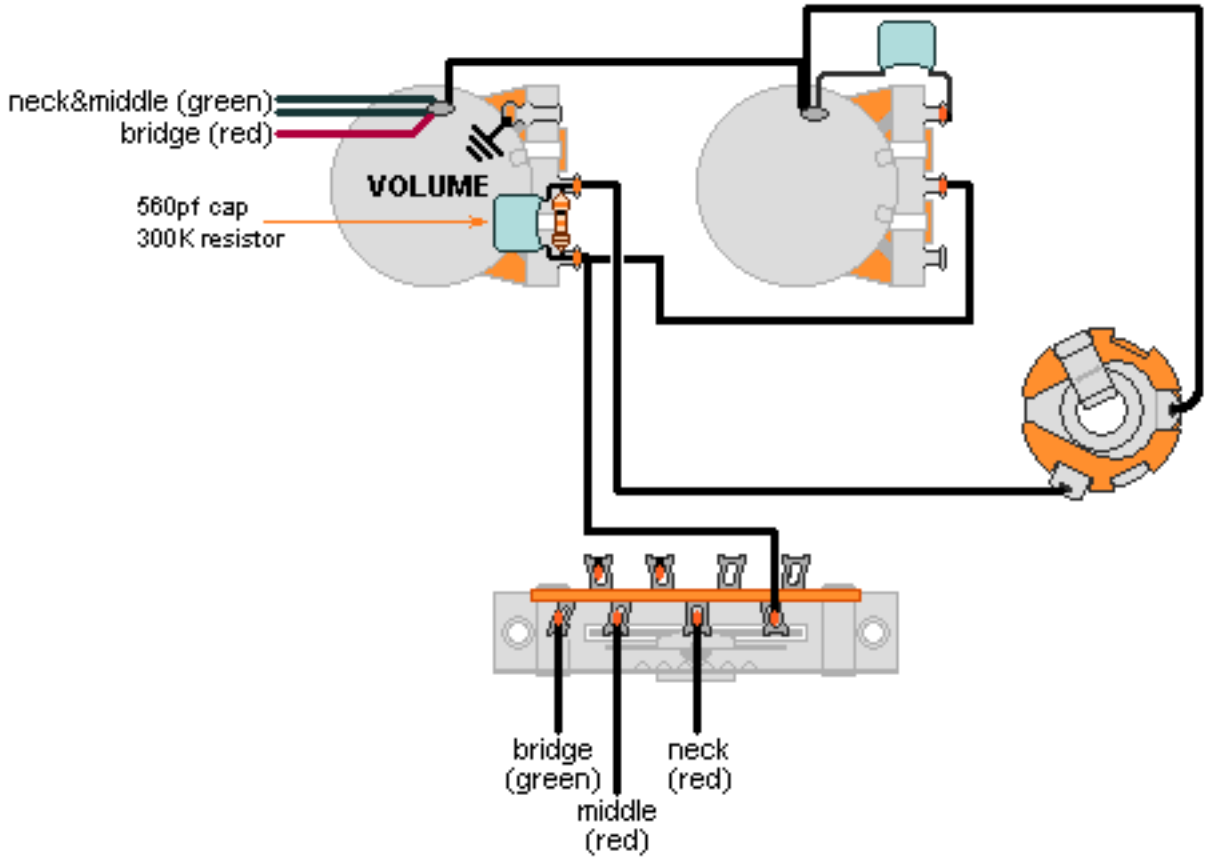

For each pickup, solder the black&white wires together and tape up each connection.

Note: Tailpiece should be connected to common ground.
All grounds ⏚ must be connected.

Copyright (C) 2003 DiMarzio, Inc. All rights reserved