DiMarzio, Inc.
1388 Richmond Terrace, PO Box 100387, Staten Island, NY 10310, Tel(718)981-9286, Fax(718)720-5296

2HUM., 1 PUSH/PULL BRIDGE VOL.(split)

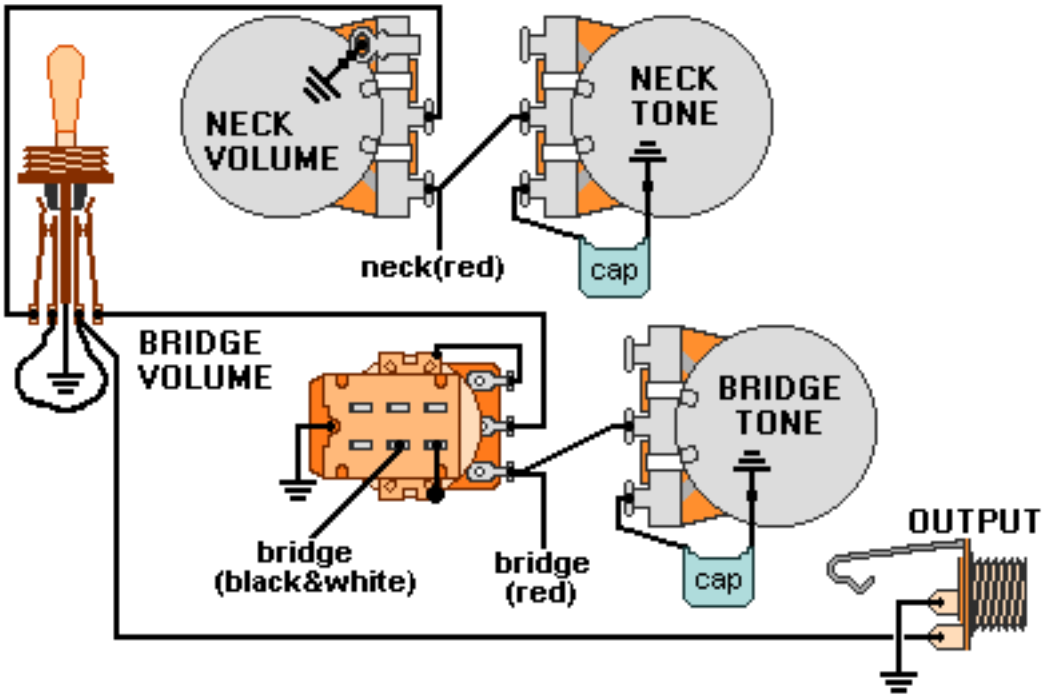

Solder the black & white wires from the neck pickup together and tape up the connection. The green and bare wires from both pickups go to ground.

Note: Tailpiece should be connected to common ground.
All grounds ⏚ must be connected.

Copyright (C) 2003 DiMarzio, Inc. All rights reserved